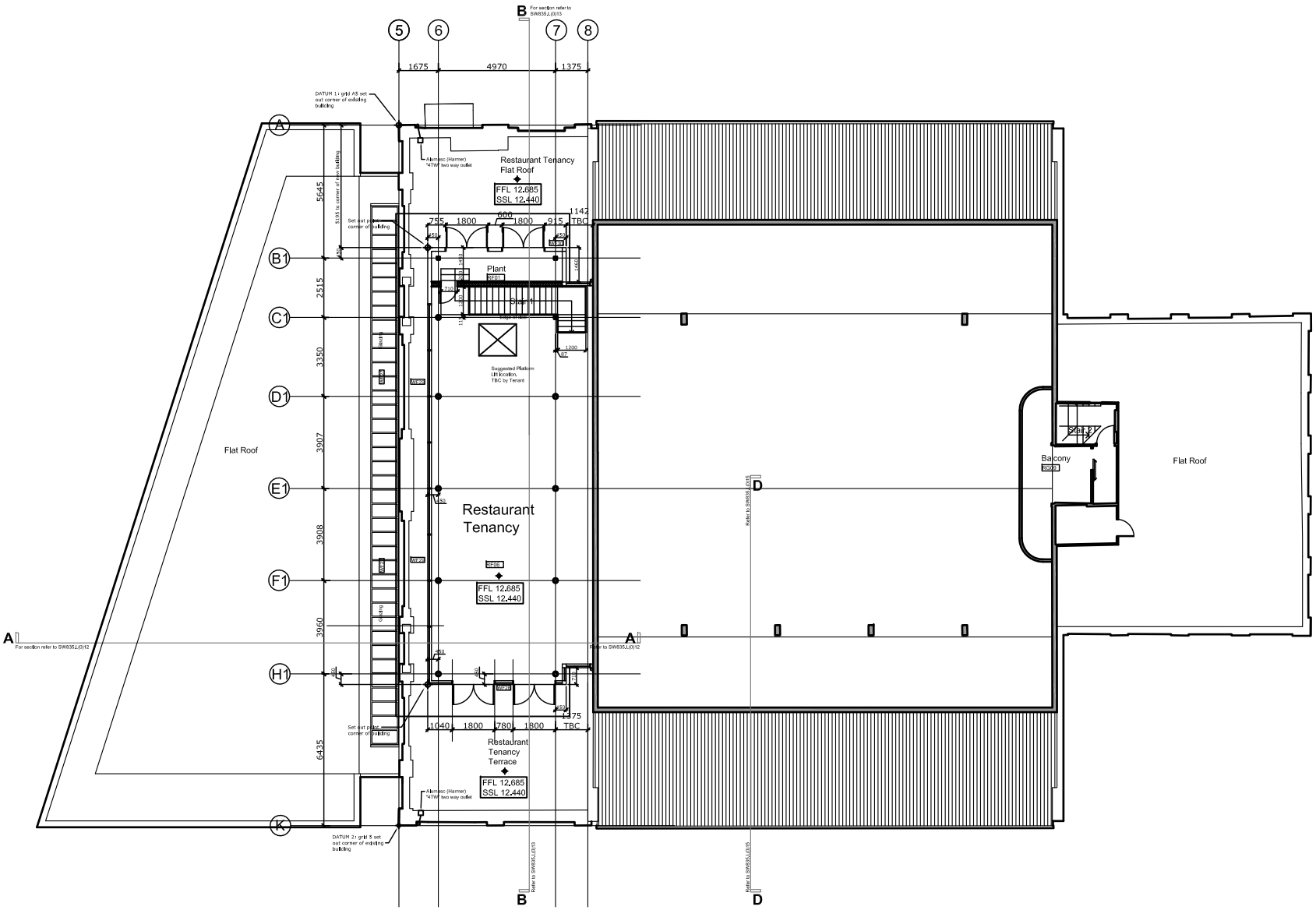

FIRST FLOOR LAYOUT